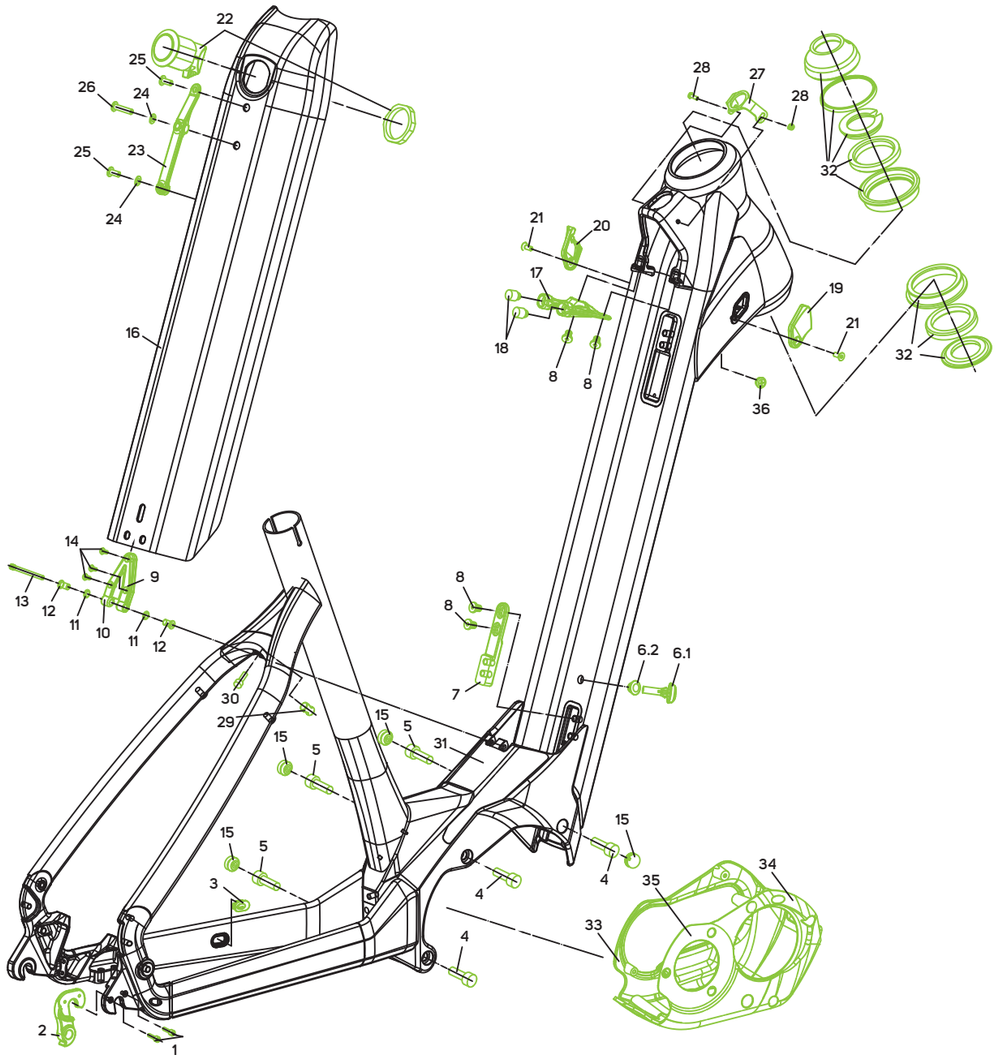

No.	Item No.	Item	Detail information	Pieces	Torque Nm
1	A2300000004	SCREW	M3x0.5 L6mm	2	2~4
2	A2311000072	RD-HANGER	DH-013F	1	
3	A2258000079	CABLE PLUG	for rear brake	1	
4	A2300000468	SCREW	M8x1.25 L18.5mm	3	11~12
5	A2300000469	SCREW	M8x1.25 L23mm	3	11~12
6.1	A2143000126	BUTTON	ON-OFF for Shimano batteries	1	
6.2	A2143000097	BLIND PLUG	for SIMPLO batteries	1	
7	A2164000088	MOUNT	for lower battery mount	1	
8	A2298000143	SCREW	M6x1.0 L10mm	4	6~8
9	A2030000016	MOUNT	for battery cover; upper part	1	
10	A2030000017	MOUNT	for battery cover; lower per	1	
11	A2160000012	O-RING	OD6mm ID4mm	2	
12	A2221000048	BUSHING	for battery cover	2	
13	A2300000530	BOLT	M5x0.8 L39.5mm	1	4~6
14	A2300000231	SCREW	M3x0.5 L8mm	3	2~4
15	A2143000153	BLIND PLUG	for drive unit screw holes	4	
16	A2161000138	COVER	for battery; frame size XS	1	
16	A2161000139	COVER	for battery; frame size S	1	
16	A2161000140	COVER	for battery; frame size M	1	
16	A2161000141	COVER	for battery; frame size L	1	

No.	Item No.	Item	Detail information	Pieces	Torque Nm
16	A2161000142	COVER	for battery; frame size XL	1	
17	A2136000071	MOUNT	for battery cover	1	
18	A2029000001	BUMPER	for battery cover	2	
19	A2258000127	CABLE GUIDE	for right side	1	
20	A2258000128	CABLE GUIDE	for left side	1	
21	A2300000228	SCREW	M4x0.7 L14mm	2	1.5~2
22	A2134000061	BUTTON	for cover lock	1	3.75~4.25
23	A2136000017	MOUNT	for bottle cage	1	
24	A2292000028	WASHER	OD9mm ID5.2mm H3mm	2	
25	A2298000154	SCREW	M5x0.8 L12mm	2	3~5
26	A2298000158	SCREW	M5x0.8 L25mm	1	3~5
27	A2164000065	MOUNT	for SIMPLO ON-OFF	1	
28	A2300000568	SCREW	M3x0.5 L6mm	2	2~4
29	A2300000204	NUT	for fender; M6	1	
30	A2300000288	SCREW	M6x1.0 L18mm	1	10~12
31	A2363000255	PROTECTOR	for step through area	1	
32	A2191000148	HEAD SET	MERIDA/VP-8252 (MH-P16/MH-P16)	1	
33	A2161000145	COVER	for drive unit; left side	1	
34	A2161000146	COVER	for drive unit; front right side	1	
35	A2161000147	COVER	for drive unit; rear right side	1	
36	A2143000122	CABLE PLUG	for front light	1	

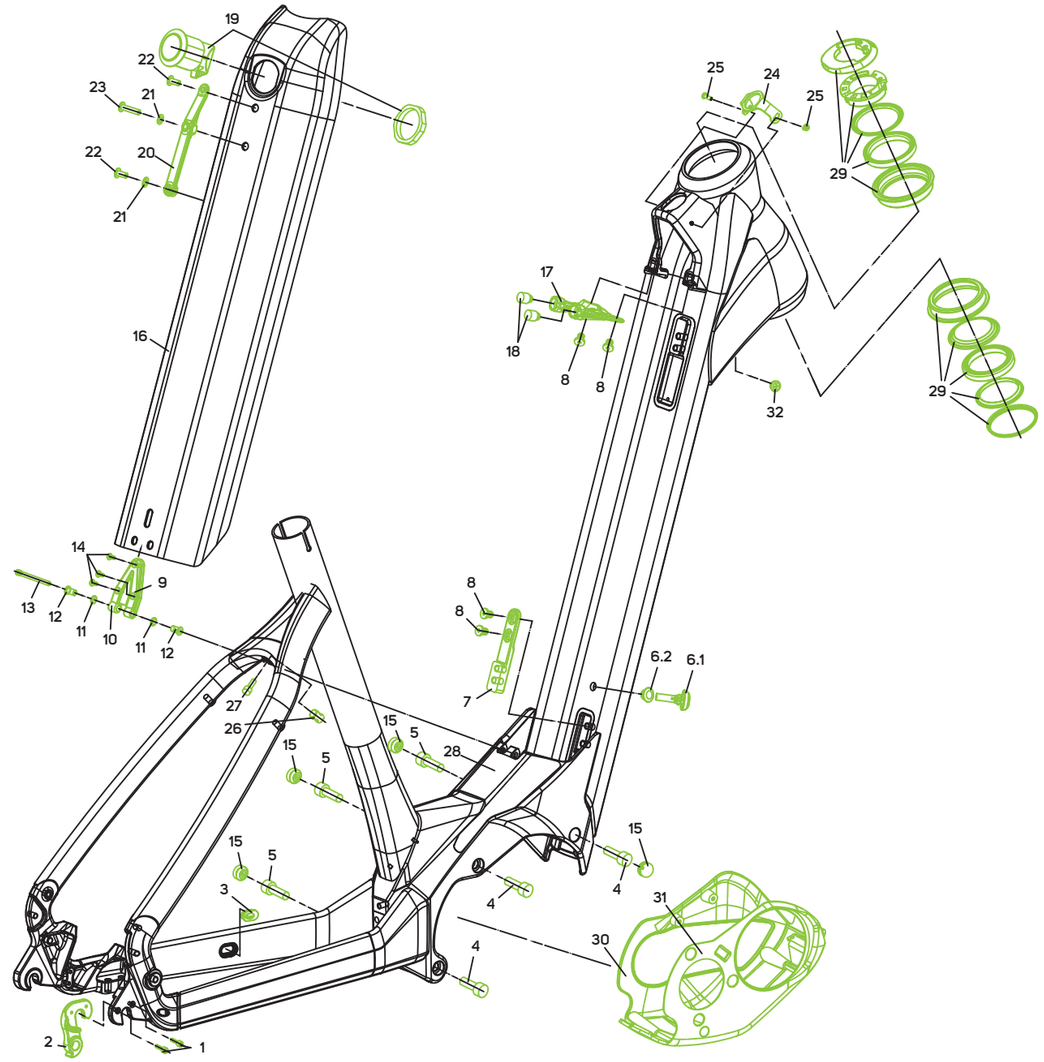

No.	Item No.	Item	Detail information	Pieces	Torque Nm
1	A2300000004	SCREW	M3x0.5 L6mm	2	2~4
2	A2311000072	RD-HANGER	DH-013F	1	
3	A2258000079	CABLE PLUG	for rear brake	1	
4	A2300000468	SCREW	M8x1.25 L18.5mm	3	11~12
5	A2300000469	SCREW	M8x1.25 L23mm	3	11~12
6.1	A2143000126	BUTTON	ON-OFF for Shimano batteries	1	
6.2	A2143000097	BLIND PLUG	for SIMPLO batteries	1	
7	A2164000088	MOUNT	for lower battery mount	1	
8	A2298000143	SCREW	M6x1.0 L10mm	4	6~8
9	A2030000016	MOUNT	upper; for battery cover	1	
10	A2030000017	MOUNT	lower; for battery cover	1	
11	A2160000012	O-RING	OD6mm ID4mm	2	
12	A2221000048	BUSHING	for battery cover	2	
13	A2300000530	BOLT	M5x0.8 L39.5mm	1	4~6
14	A2300000231	SCREW	M3x0.5 L8mm	3	2~4
15	A2143000153	BLIND PLUG	for drive unit screw holes	4	
16	A2161000138	COVER	for battery; frame size XS	1	
16	A2161000139	COVER	for battery; frame size S	1	
16	A2161000140	COVER	for battery; frame size M	1	
16	A2161000141	COVER	for battery; frame size L	1	
16	A2161000142	COVER	for battery; frame size XL	1	

No.	Item No.	Item	Detail information	Pieces	Torque Nm
17	A2136000071	MOUNT	for battery cover	1	
18	A2029000001	BUMPER	for battery cover	2	
19	A2134000061	BUTTON	for cover lock	1	3.75~4.25
20	A2136000017	MOUNT	for bottle cage	1	
21	A2292000028	WASHER	OD9mm ID5.2mm H3mm	2	
22	A2298000154	SCREW	M5x0.8 L12mm	2	3~5
23	A2298000158	SCREW	M5x0.8 L25mm	1	3~5
24	A2164000065	MOUNT	for SIMPLO ON-OFF	1	
25	A2300000568	SCREW	M3x0.5 L6mm	2	2~4
26	A2300000204	NUT	for fender; M6	1	
27	A2300000288	SCREW	M6x1.0 L18mm	1	10~12
28	A2363000255	PROTECTOR	for step through area	1	
29	A2191000138	HEAD SET	MERIDA/ACROS-ICR TREKKING	1	
30	A2161000143	COVER	for drive unit; left side	1	
31	A2161000144	COVER	for drive unit; right side	1	
32	A2143000122	CABLE PLUG	for front light	1	
33	A2161000145	COVER	for drive unit; left side	1	
34	A2161000146	COVER	for drive unit; front right side	1	
35	A2161000147	COVER	for drive unit; rear right side	1	
36	A2143000122	CABLE PLUG	for front light	1	