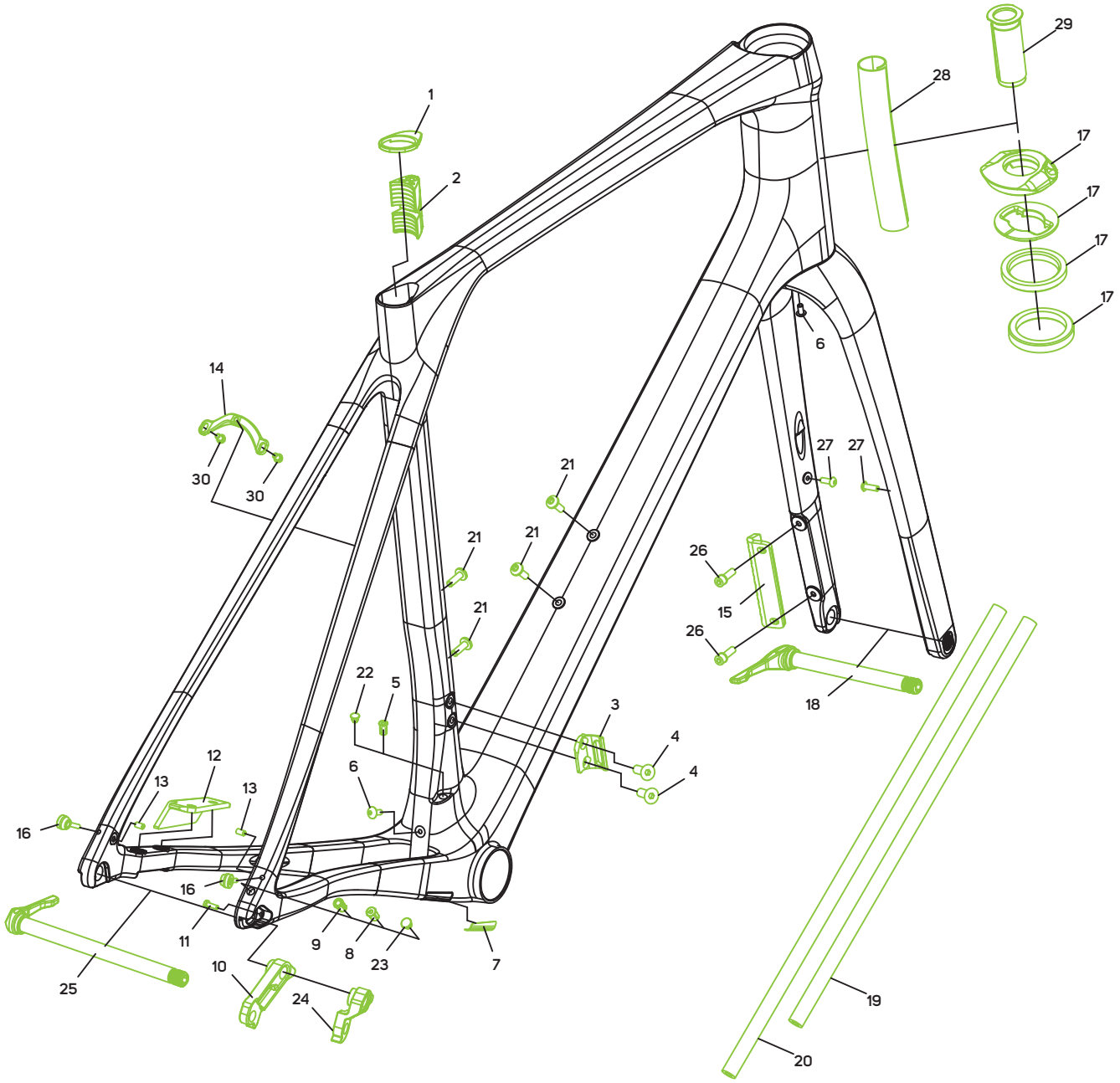

No.	Item No.	Item	Detail information	Pieces	Torque Nm
1	A2247000023	COVER	for seatpost clamp	1	
2	A2247000120	CLAMP	for seatpost	1	4~5
3	A2136000054	MOUNT	for FD	1	
4	A2300000010	SCREW	M5x0.8 L12mm	2	4~5
5	A2143000095	CABLE PLUG	for Di2	1	
6	A2298000319	SCREW	M4x0.7 L9mm	2	3~4
7	A2322000045	PROTECTOR	for chain stay	1	
8	A2143000121	CABLE PLUG	for Di2	1	
9	A2143000082	CABLE PLUG	for mechanical	1	
10	A2311000103	RD HANGER	DH-067 for SHIMANO direct mount	1	
11	A2300000129	SCREW	M3x0.5 L10mm	1	2~3
12	A2164000039	DISC COOLER	rear, for FM160/FM180	1	
13	A2298000356	SCREW	M4x0.7 L8mm	2	3~4
14	A2030000002	MOUNT	for fender	1	
15	A2164000038	DISC COOLER	front, for FM160/FM180	1	
16	A2164000089	MOUNT	for fender	2	
17	A2192000190	HEADSET	MERIDA-8151 (MH-P16/MH-P16)	1	

No.	Item No.	Item	Detail information	Pieces	Torque Nm
18	A2002000120	THRU AXLE	EXPERT TR; L=120mm M12x1.5 TL=12mm	1	
19	A2029000036	TUBE	foam; ID6mm L 400mm	1	
20	A2029000037	TUBE	foam; ID6mm L 450mm	1	
21	A2298000059	SCREW	M5x0.8 L15mm	4	3~4
22	A2143000130	BLIND PLUG		1	
23	A2143000131	BLIND PLUG		1	
24	A2311000104	RD HANGER	DH-068 for ROAD-RD	1	
25	A2002000119	THRU AXLE	EXPERT TR; L=162.5mm M12x1.5 TL=12mm	1	
26	A2298000265	SCREW	M5x0.8 L16mm	2	6~8
27	A2298000361	SCREW	M4x0.7 L12mm	2	3~4
28	A2029000057	TUBE	woven; L70mm for size XXS	1	
28	A2029000058	TUBE	woven; L90mm for size XS/S	1	
28	A2029000059	TUBE	woven; L105mm for size M	1	
28	A2029000060	TUBE	woven; L125mm for size L	1	
28	A2029000061	TUBE	woven; L150mm for size XL	1	
29	A2054000107	EXPANDER	for fork steerer ID 23.6mm	1	6~8
30	A2298000360	SCREW	M4x0.7 L6mm	2	3~4