eONE-SIXTY LITE IV

SUSPENSION HARDWARE

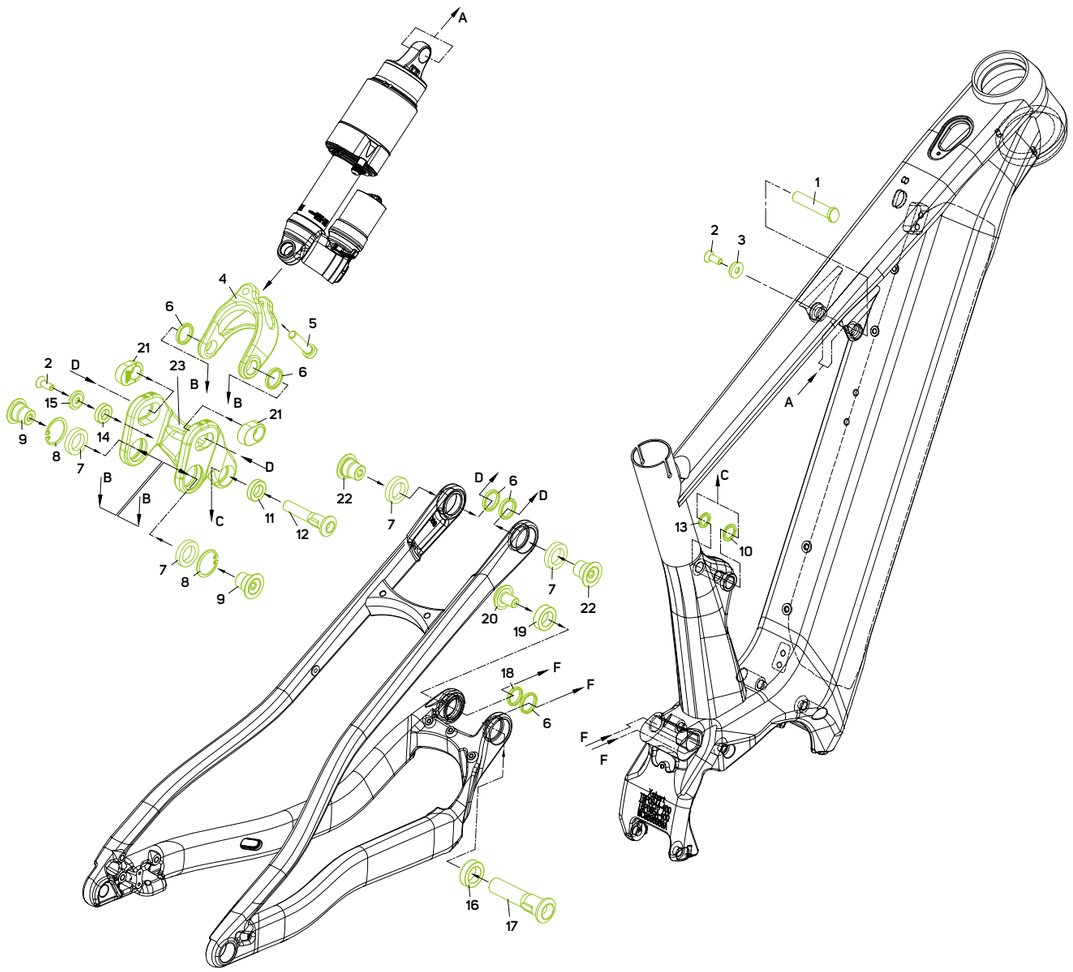

No.	Item No.	Item	Detail information	Pieces	Torque Nm
1	A2294000016	WASHER	OD19mm ID15.1mm H3mm	1	
2	A2294000102	WASHER	OD21mm ID17.1mm H3mm	5	
3	A2221000043	BEARING	3802V-2RS OD24mm ID15mm W7mm	1	
4	A2221000040	BEARING	172607V-2RS OD26mm ID17mm W7mm	1	
5	A2300000609	SCREW	M10x1 L15mm	1	15-17
6	A2300000279	BOLT	M6x1 OD15/17mm L55mm	1	
7	A2300000724	BOLT	M6x1 OD10mm L49.2mm	1	
8	A2294000196	WASHER	for M6 sunkenhead screw OD16mm	1	
9	A2298000113	SCREW	M6x1 L16mm	2	8-10
10	A2036000030	MOUNT	for shock with bushing	1	
11	A2292000017	WASHER	OD14mm ID18.1mm H0.5mm	1	
12	A2300000667	SCREW	M8x1.25 L40mm	1	11-12
13	A2031000091	LINK		1	
14	A2221000058	BEARING	6803V-2RS OD26mm ID17mm W5mm 4	4	

No.	Item No.	Item	Detail information	Pieces	Torque Nm
15	A2294000182	LOCK RING	for ID26	4	
16	A2300000684	SCREW	M15x1 L16mm	2	23-25
17	A2294000105	WASHER	OD17mm ID12.1mm H2mm	1	
18	A2294000205	WASHER	OD15.5mm ID10.1mm H2mm	1	
19	A2221000035	BEARING	6801V-2RS OD21mm ID12mm W5mm	1	
20	A2221000034	BEARING	6800V-2RS OD19mm ID10mm W5mm	1	
21	A2294000197	WASHER	for M6 sunkenhead screw OD18.5mm	1	
22	A2300000475	BOLT	M6x1 OD10/12mm L55mm	1	
23	A2300000683	SCREW	M15x1 L18.5mm	2	23-25
24	A2302000082	NUT	M15x1 flipchip	2	
25	A2311000102	RD-HANGER	UDH	1	

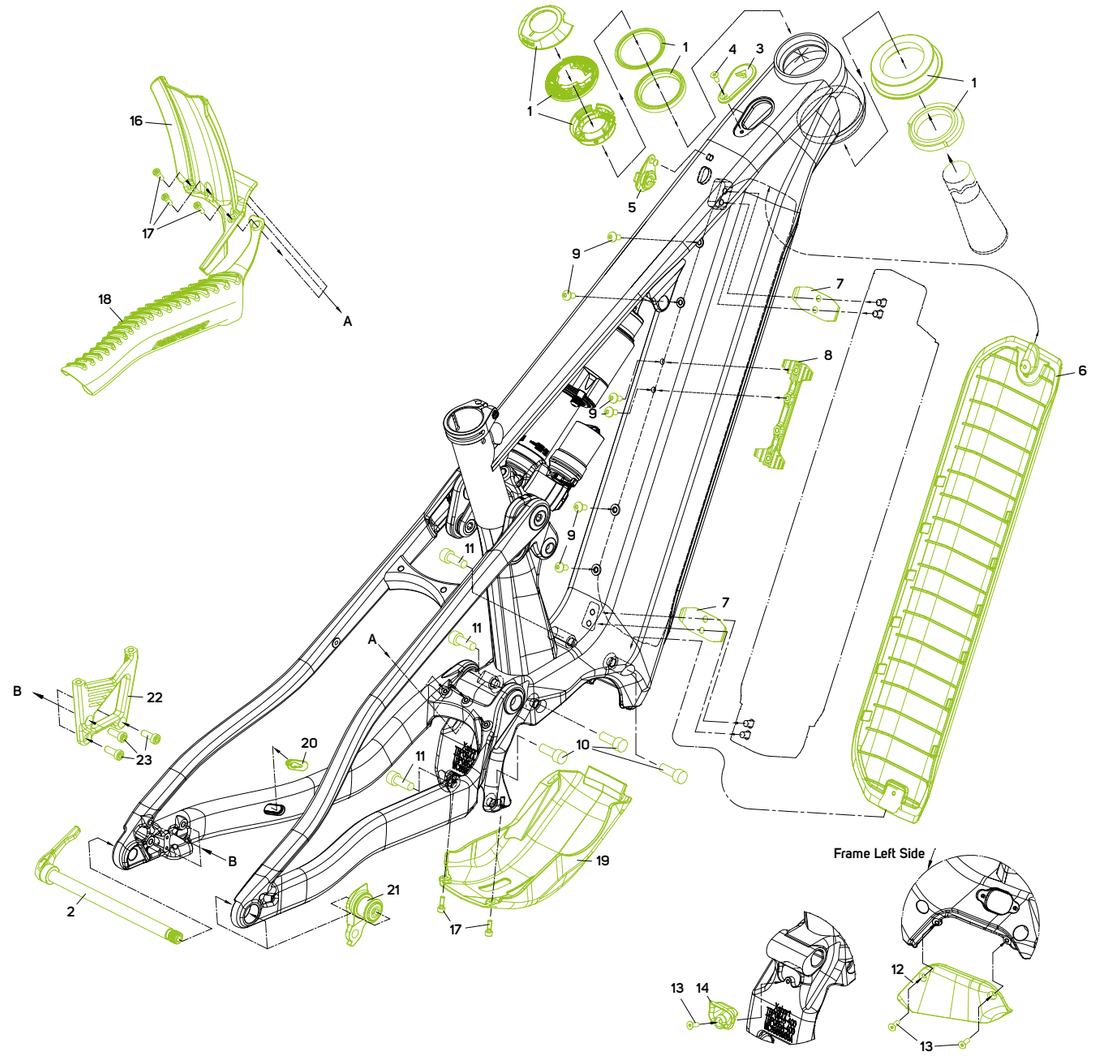

No.	Item No.	Item	Detail information	No.	Item No.	Pieces	Torque Nm
1	A2191000233	HEAD SET	Acros AZA-718			1	
2	A2002000135	THRU AXLE	EXPERT TR; L=178.5mm M12x1 TL=13.5mm			1	
3	A2161000079	COVER				1	
4	A2300000231	SCREW	M3x0.5 L8mm			1	0.5-1
5	A2143000129	COVER	for lock opening			1	
6	A2263000042	COVER	for battery			1	
7	A2111000010	CABLE GUIDE				2	
8	A2161000127	CABLE GUIDE				1	
9	A2298000144	SCREW	M5x0.8 L10mm			6	3-5
10	A2300000468	SCREW	M8x1.25 L18.5mm			3	11-12
11	A2300000469	SCREW	M8x1.25 L23mm			3	11-12
12	A2263000043	COVER	for engine			1	

No.	Item No.	Item	Detail information	Pieces	Torque Nm
13	A2300000230	SCREW	M4x0.7 L12mm	3	
14	A2143000175	CABLE GUIDE		1	
16	A2116000278	PROTECTOR		1	
17	A2300000318	SCREW	M4x0.7 L12mm	5	3-5
18	A2158000094	PROTECTOR	for chain stay	1	
19	A2263000044	PROTECTOR	for engine	1	
20	A2258000099	CABLE PLUG	for brake and speed sensor/light	1	
21	A2311000102	RD-HANGER	UDH	1	
22	A2136000076	MOUNT	PM200	1	
23	A2298000409	SCREW	M6x1 L12mm	3	12-14